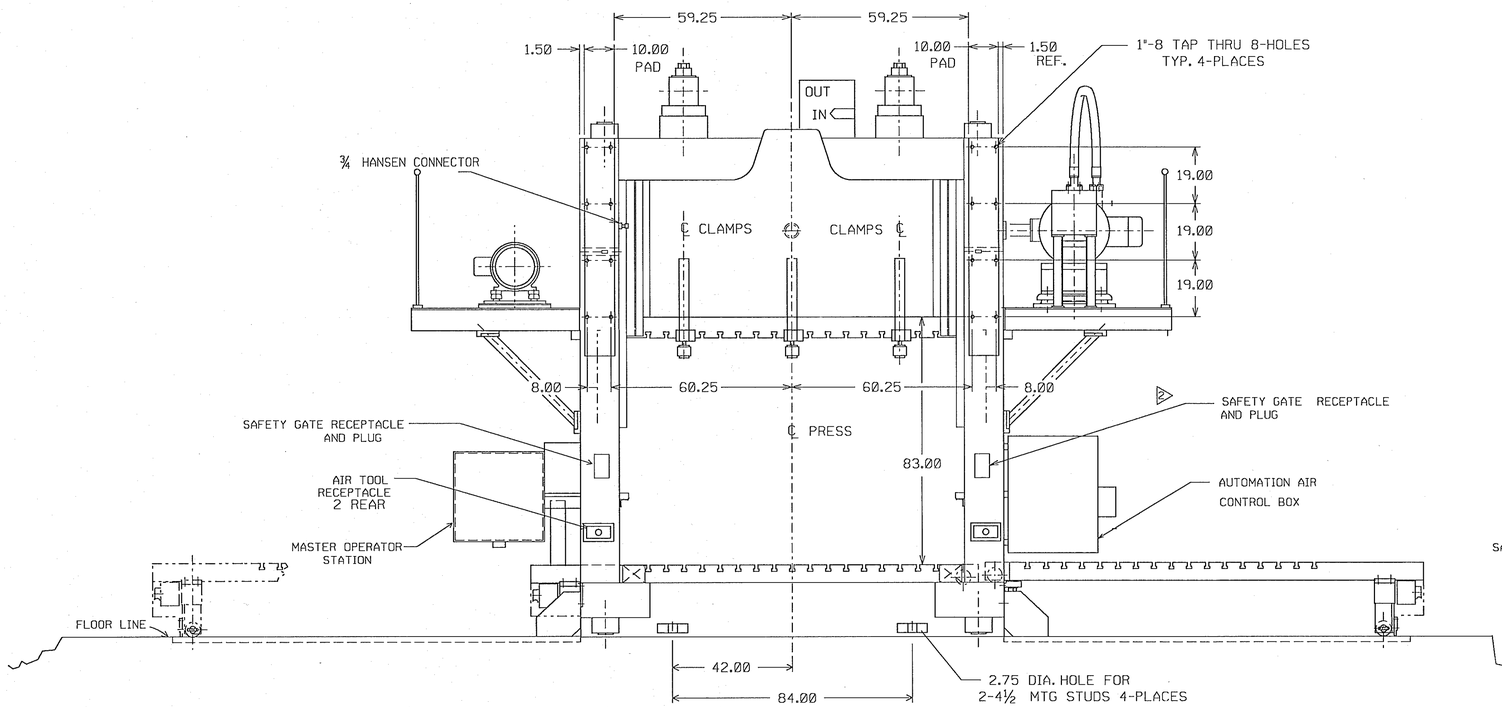

REAR VIEW

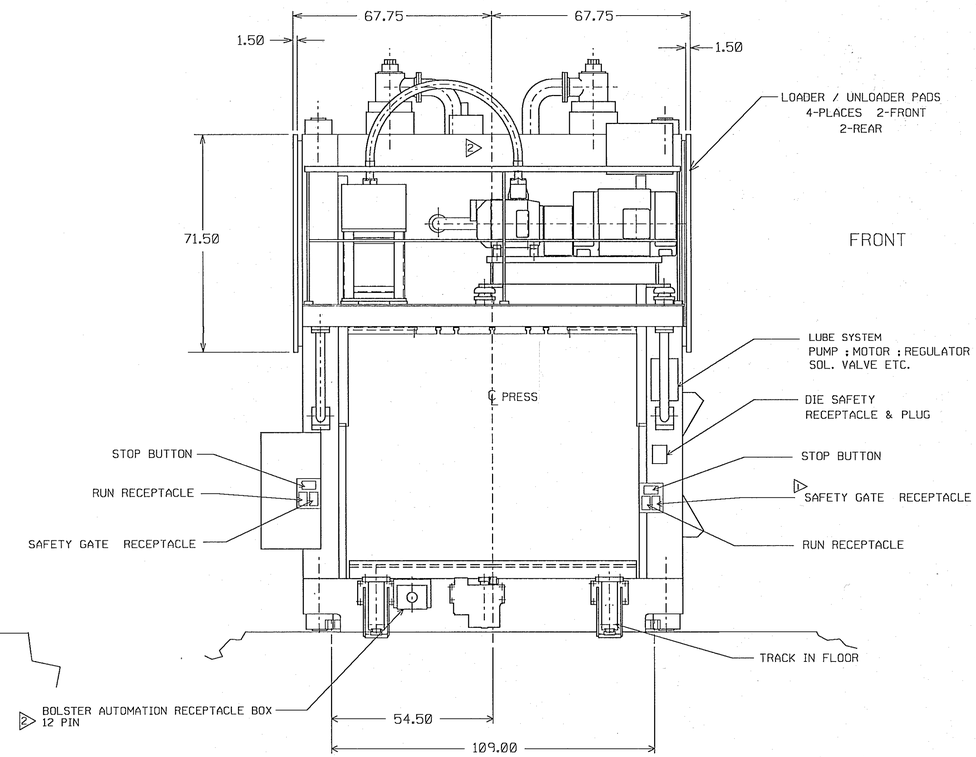

LEFT SIDE VIEW

DRAWING NO.	
	D SHEET

NOTE:
THIS GENERAL ASSEMBLY APPLIES TO PRESS SERIAL No. 29088 - 29092.

SERIAL NO. 29088 - 29092

MACHINE:			
2	UPDATED DRAWING.	1/12/94	MB
1	"SAFETY GATE" WAS "DIE SPACE"	4-2-93	I.C.
SYM	MODIFICATION	DATE	NAME

APPROVED BY	DATE	DRAWING NO.	PART NO.
		THIS SHEET ALSO USED FOR	

DIMENSIONAL TOLERANCES UNLESS OTHERWISE SPECIFIED:
MILLIMETERS: 1 PLACE ± 0.3 mm; 2 PLACE ± 0.03 mm; 3 PLACE ± 0.015 mm
INCHES: 2 PLACE ± .01; 3 PLACE ± .001; 4 PLACE ± .0005

3rd ANGLE PROJECTION

MARK IDENTIFICATION AND MATERIAL NUMBERS ON TOOL DETAILS.
PAINT IDENTIFICATION NUMBERS ON STRUCTURAL WORK.

DO NOT SCALE DRAWING

AMT.	SYM.	SHEET	NAME OR STOCK SIZE	MATERIAL	WT. LBS.

PART NO.	SHEET 2	SHEETS 2	DRAWING NO.

DES. BY	DET. BY	TITLE P.O. # AP-7000-136673-2
	I.C.	VERSON 500-HD4-108-96 T
		DWG. APPLIES TO PRESS SERIAL NO. 29088 - 29092
CHECKED BY	SAFETY OK	GENERAL ASSEMBLY
J.W.		ASSEMBLY NO. 80.00
		VERSON DWG. 29088-4001
DATE	SCALE	DIVISION: BODY & ASSEMBLY
12-15 92	½"=1'	PLANT: SEE COVER SHEET
		LOCATION/ACTIVITY: SEE COVER SEET

Ford

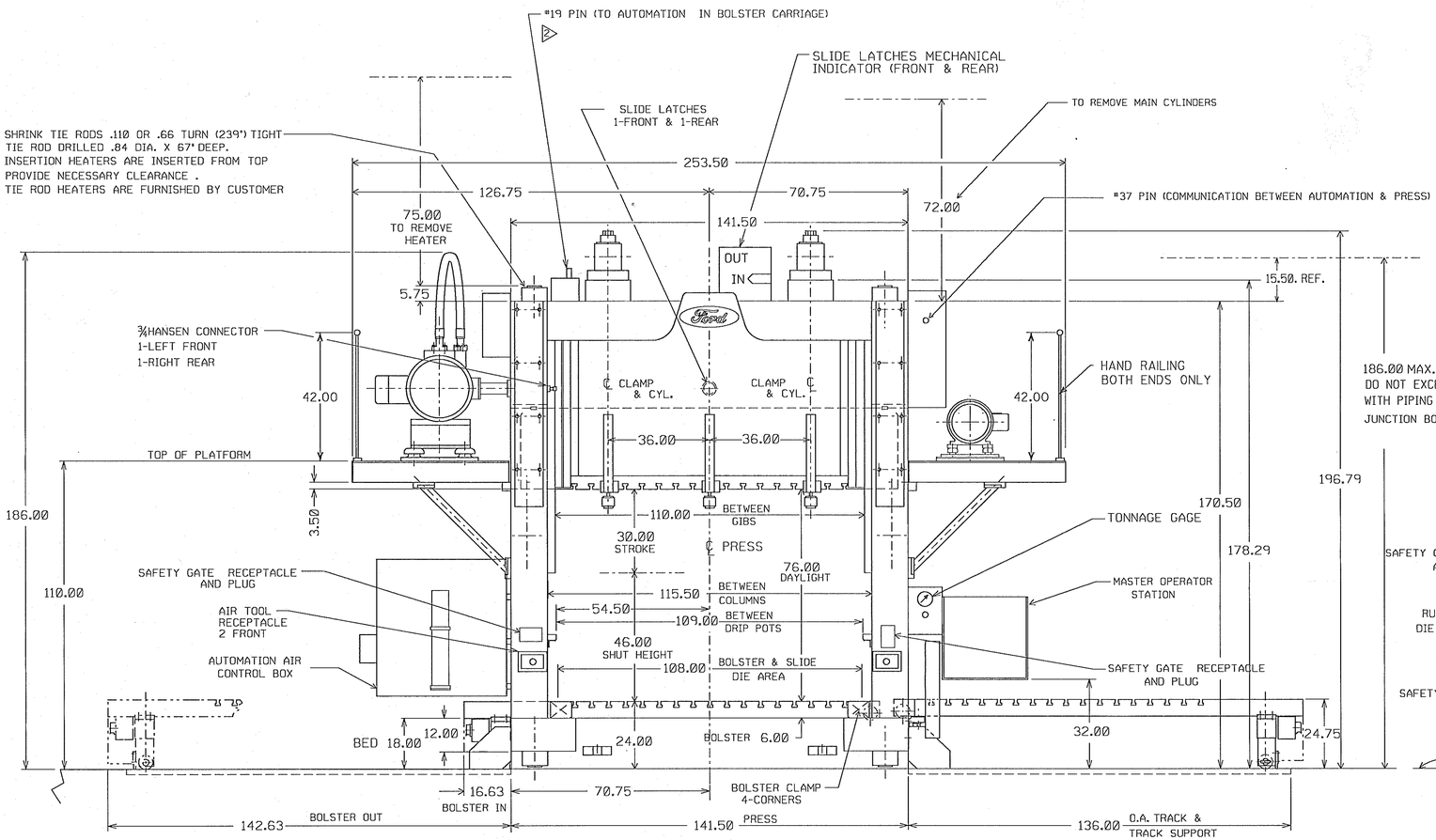

FRONT VIEW

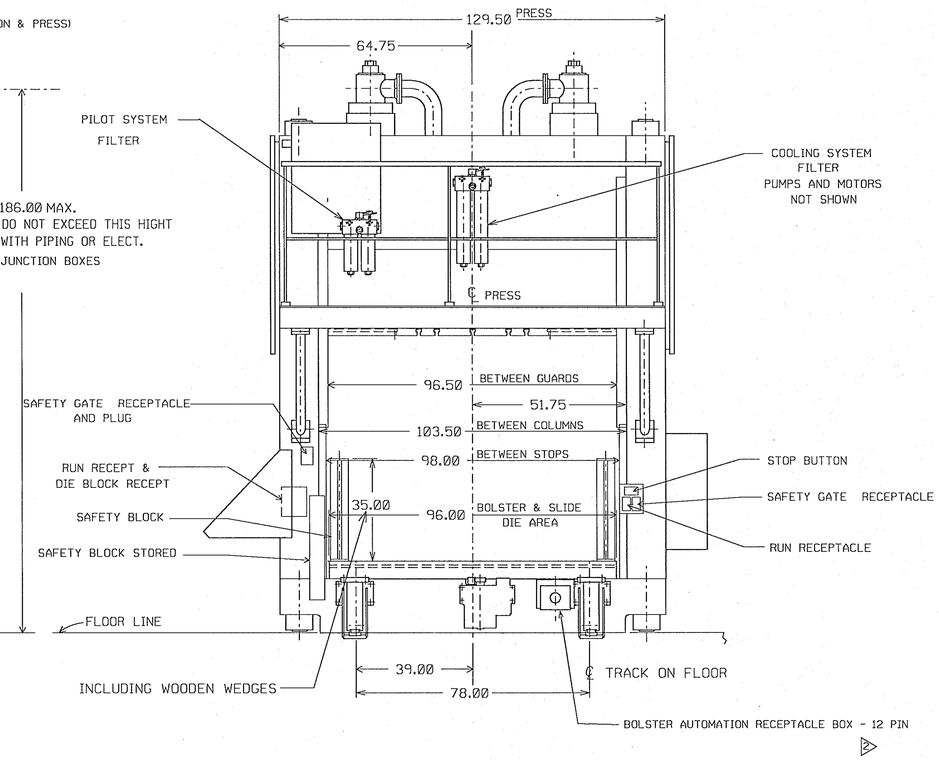

RIGHT SIDE VIEW

WEIGHTS

BED ASSEMBLY	77,800 #
COLUMN ASSEMBLY EACH 2,400 #	9,600 #
TIE RODS & NUTS	5,200 #
SLIDE ASSEMBLY	32,750 #
CROWN ASSEMBLY LESS CYLINDERS	24,600 #
DOUBLE ACTING CYLINDER EACH 2,325 #	4,650 #
SINGLE ACTING CYLINDER EACH 2,325 #	4,650 #
CATWALKS RAILING & PLATFORMS	6,000#
POWER UNIT PUMPS / MOTOR VALVES PIPING , MANIFOLDS .	11,000 #
MOVINGS BOLSTER ASSEMBLY EACH 25,850 #	49,100 #
TOTAL WEIGHT APPROX.	227,950 LBS

500-HD4-108-96-4T

CAPACITY OF PRESS @ 2930 PSI	500 TONS
STROKE OF PLATEN	30 INCHES
DAY LIGHT	76 INCHES
SHUT HEIGHT	46 INCHES
FAST ADVANCE SPEED PER MINUTE	1160 INCHES
PRESSING SPEED PER MINUTE	120 INCHES
FAST RETURN SPEED PER MINUTE	990 INCHES
MAIN PUMP MOTOR	150 HP @ 1200 RPM
AUXILIARY PUMP MOTOR	60 HP @ 1200 RPM
FILTERING & COOLING PUMP MOTOR	5 HP @ 1200 RPM
HEIGHT ABOVE FLOOR WITH PREFILL VALVES REMOVED	186.00 INCHES
HEIGHT ABOVE FLOOR AT PREFILL VALVES	198.00 INCHES

DRAWING NO.
D SHEET

NOTE:
THIS GENERAL ASSEMBLY APPLIES TO PRESS SER. No. 29088 - 29092.

SERIAL NO. 29088 - 29092

MACHINE:			
	RELOCATED BOLSTER AUTOMATION RECEPTACLES.	1/12/94	MB
	ADDED #12, 19 & 37 PIN	4-2-93	I.C.
SYM	MODIFICATION	DATE	NAME

APPROVED BY	DATE

DRAWING NO.	PART NO.
THIS SHEET ALSO USED FOR	

DIMENSIONAL TOLERANCES UNLESS OTHERWISE SPECIFIED:

MILLIMETRES	INCHES
1 PLACE ± 0.3 mm	2 PLACE ± .01
2 PLACE ± 0.03 mm	3 PLACE ± .001
3 PLACE ± 0.015 mm	4 PLACE ± .0005

3rd ANGLE PROJECTION

MARK IDENTIFICATION AND MATERIAL NUMBERS ON TOOL DETAILS.
PAINT IDENTIFICATION NUMBERS ON STRUCTURAL WORK.

DO NOT SCALE DRAWING

AMT.	SYM.	SHEET	NAME OR STOCK SIZE	MATERIAL	WT. LBS.

PART NO.	SHEET	SHEETS	DRAWING NO.
	1	2	

DES. BY	DET. BY	TITLE P.O.# AP-7000-136673-2
	I.C.	VERSON 500-HD4-108-96 T DWG. APPLIES TO PRESS SERIAL NO. 29088 - 29092 GENERAL ASSEMBLY ASSEMBLY NO. 80.00
CHECKED BY J.W.	SAFETY OK	VERSON DWG. 29088-4001
DATE 12-15 92	SCALE ½"=1'	DIVISION: BODY & ASSEMBLY PLANT: SEE COVER SHEET LOCATION/ACTIVITY: SEE COVER SHEET